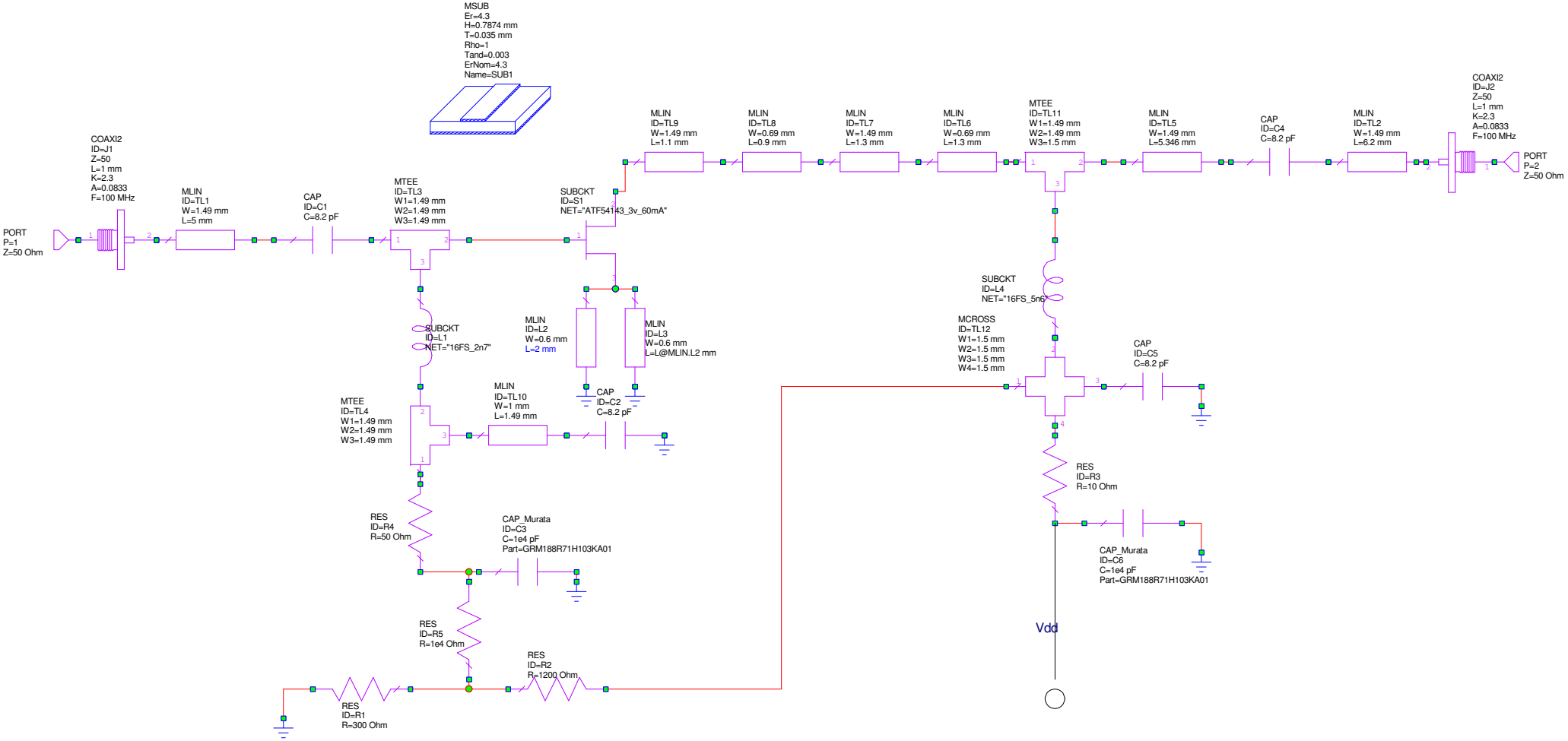# Practical circuit for the Real Amplifier Including ALL Tracks & Pads