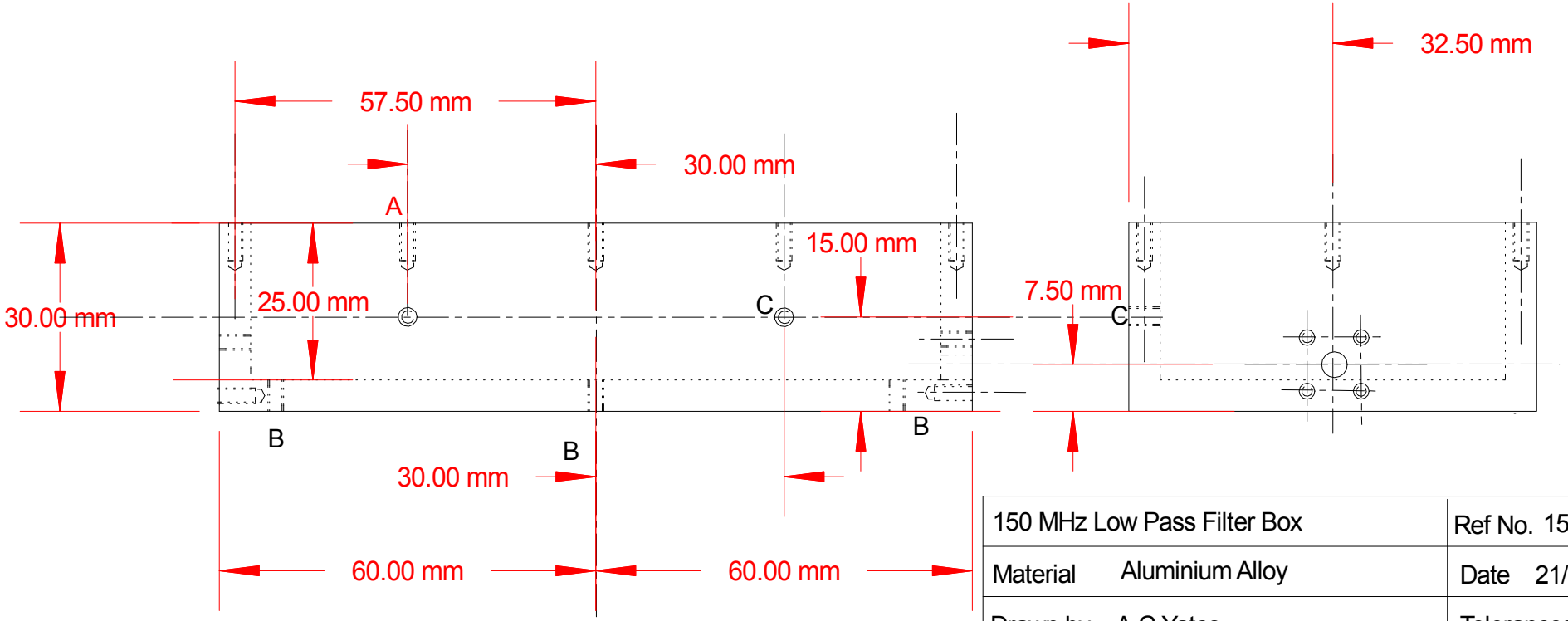


| | |
|---|---|
| 150 MHz Low Pass Filter Box | Ref No. 150MHz_LPF_01 |
| Material Aluminium Alloy | Date 21/11/06 |
| Drawn by A.C.Yates | Tolerances +/- 0.1mm |

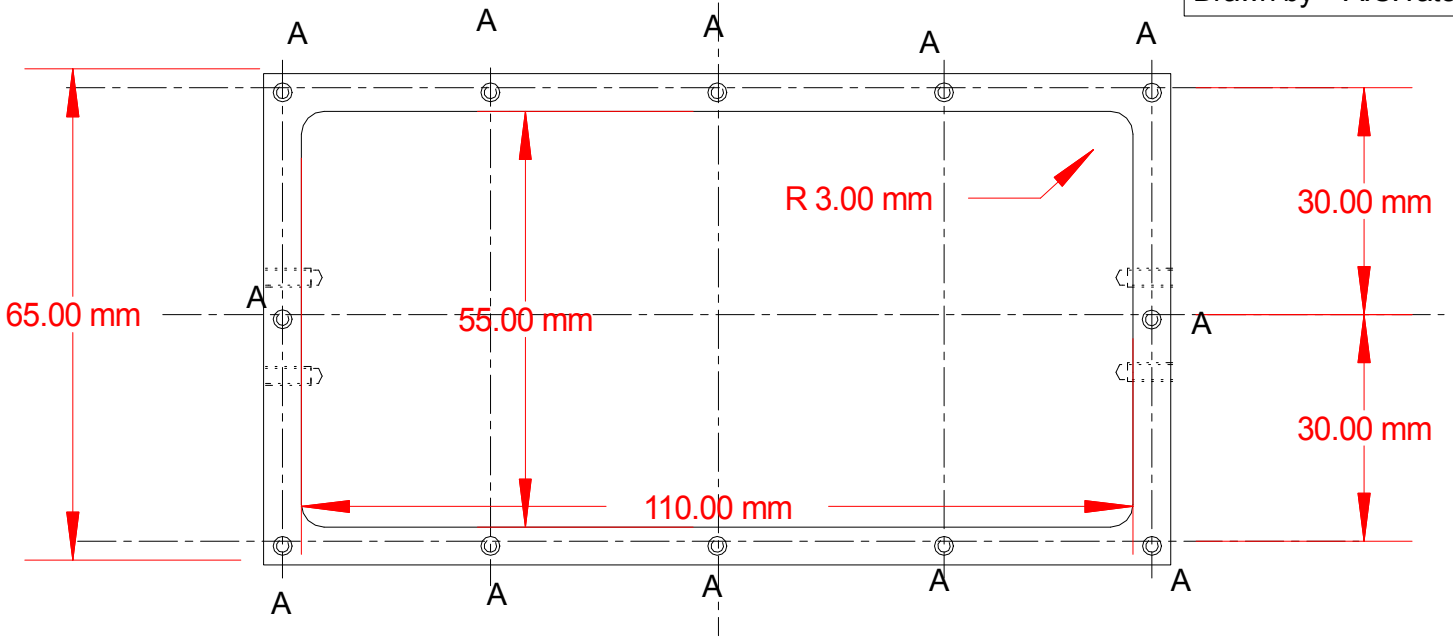


Holes " A " = M2.5 x 6 deep
Holes " B " = M2.5 x Thru
Holes " C" M3 thru
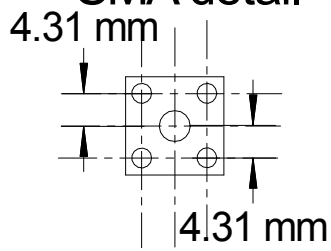
SMA detail